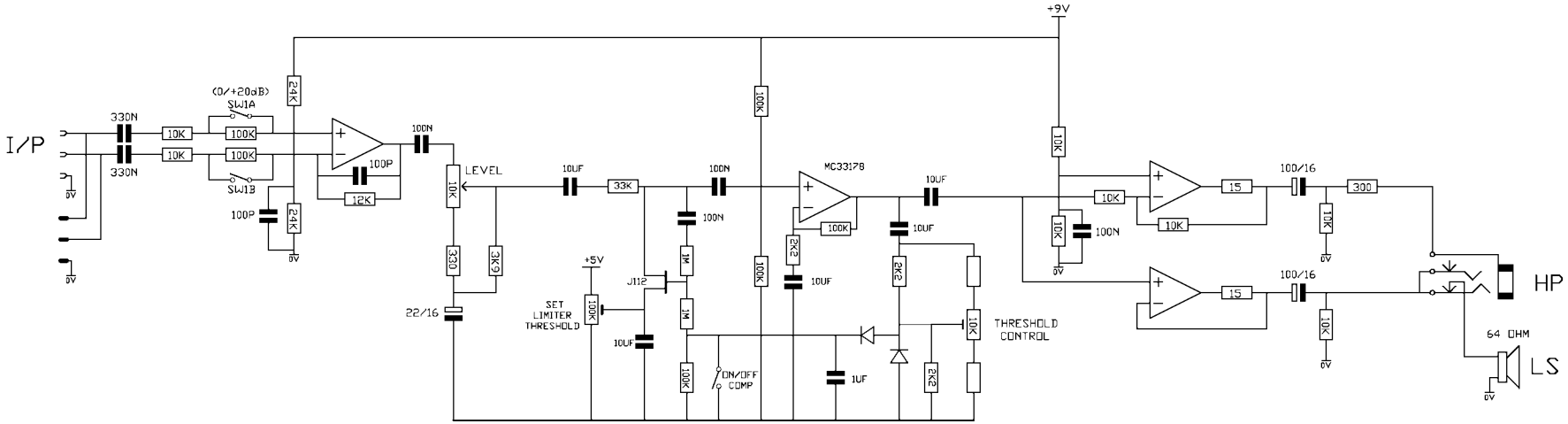

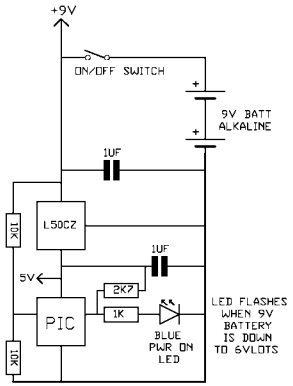

© 2008

GLENSOUND
ELECTRONICS LTD

GS-HAxxx
CIRCUIT DIAGRAM

ISSUE	DATE	DRAWING NUMBER
1	28/08/08	A2-16xxx
		DRAWN BY
		ORIGINALLY DRAWN USING AUTOTRAX